Components | *Wheels / Double flange*

Features:

- Capacities from 1.500 - 12.500 Kg
- Heavy duty double flange wheels, steel C45
- Diameters up to 500 mm
- Fully enclosed 2RS bearings, life time lubricated
- Wheel shafts delivered as loose item, also in special dimensions possible
- Available for manual and motor driven trolleys and cranes
- Standard for 30/20, 50/30 or 60/40 crane rails available see table

Optional:

- Wheel shaft with fasteners, for application in constructions, different plate size and thickness.
- Execution with cone clamp or nut key
- Also available in stainless steel, Aluminium Bronze CUAL10NI
- Other materials on request
- Drive pinions for motor and manual drive
- Custom built wheels for replacement or special applications

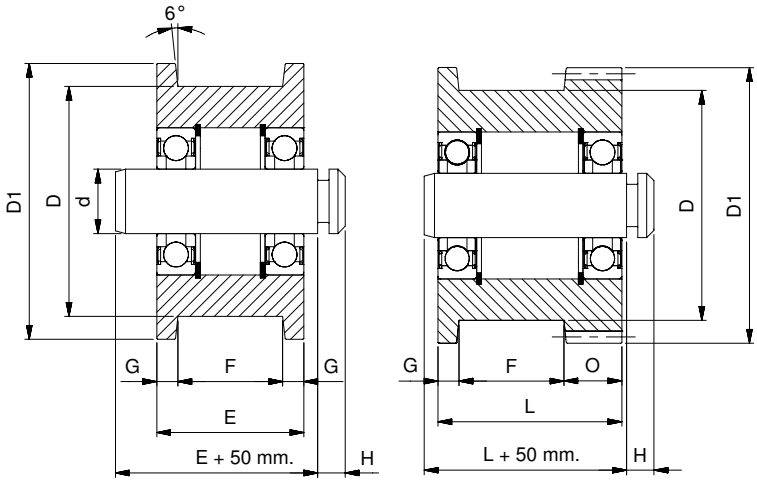

Technical information:

Do you need a special design or replacement for an existing Construction ? Feel free to contact us for more information. Technical assistance will be provided to find a correct solution for your specific needs.

Components / Wheels / Double flange (Art. Group 85600)

Push + Handgeared Double Flange

D mm	D1 mm	S-355 Rails	d	m - z	Ro. KN Nom	2 x 2RS Bearing	Fn N / KN	E	F	G	L	O	H	Push 85600.. Art. Nr	Push 85600.. Price €	Geared Manual 85600.. Art. Nr	Geared Manual 85600.. Price €	Shaft 85600.. Art. Nr	Shaft 85600.. Price €
125	150	30 / 20	35	3 - 48	26	6207	16	60	37	11.5	-	-	15	..12530		..12531		..03500	
125	150	50 / 30	35	3 - 48	36	6307	16	80	57	11,5	-	-	15	..12550		..12551		..03501	
160	180	50 / 30	40	3 - 58	45	6308	12	80	57	11,5	-	-	15	..16050		..16051		..04000	
200	220	50 / 30	45	3 - 70	53	6309	9	80	57	11,5	-	-	15	..20050		..20051		..04500	

Motor driven, Electric, Pneumatic, Hydraulic

D mm	D1 mm	S-355 Rails	d	m - z	Nom. Ro. KN V20-25%	Nom. Ro. KN V40-40%	2 x 2RS Bearing	Fn N / KN	E	F	G	L	O	H	Push 85600.. Art. Nr	Push 85600.. Price €	Geared Motor 85600.. Art. Nr	Geared Motor 85600.. Price €	Shaft 85600.. Art. Nr	Shaft 85600.. Price €
125	150	30 / 20	35	3 - 48	22	17	6207	16	60	37	11,5	80	31,5	15	..12530		..12533		..03500	
125	150	50 / 30	35	3 - 48	32	25	6307	16	80	57	11,5	100	31,5	15	..12550		..12553		..03501	
160	180	50 / 30	40	3 - 58	42	34	6308	12	80	57	11,5	100	31,5	15	..16050		..16053		..04000	
200	220	50 / 30	45	3 - 70	53	44	6309	9	80	57	11,5	100	31,5	15	..20050		..20053		..04500	
250	272	50 / 30	50	4 - 66	70	57	6310	7	80	57	11,5	110	41,5	15	..25050		..25050		..05000	
315	348	50 / 30	55	4 - 85	90	76	6311	6	90	60	15	120	45	15	..31550		..31553		..05500	
400	432	50 / 30	60	4 - 106	104	99	6312	5	90	60	15	120	45	15	..40050		..40053		..06000	
500	540	60 / 40	70	6 - 88	136	136	6314	4	100	70	15	150	65	20	..50060		..50063		..07000	

@ = on request